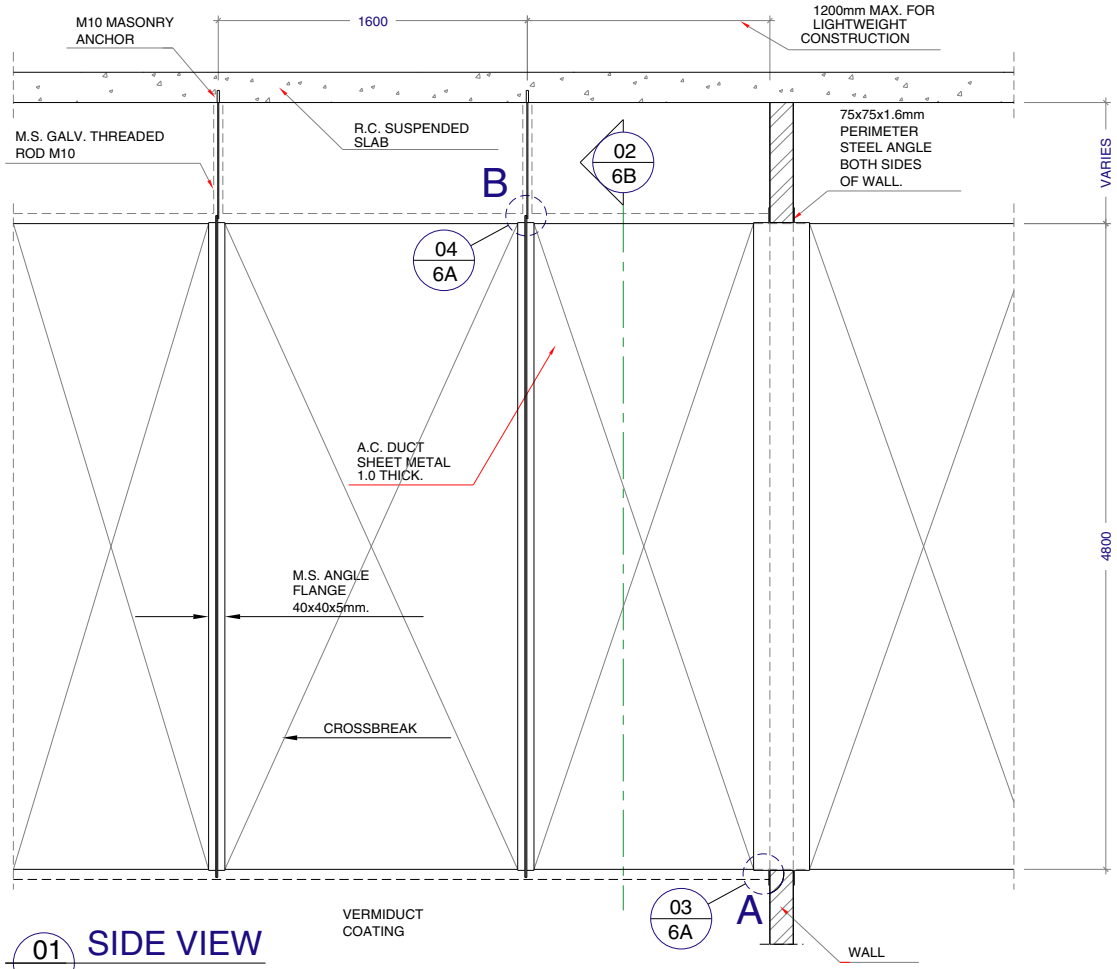

01 - SIDE VIEW

SCALE 1/25

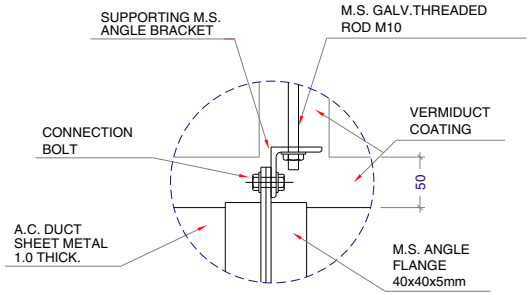

04 - DETAIL B

SCALE 1/5

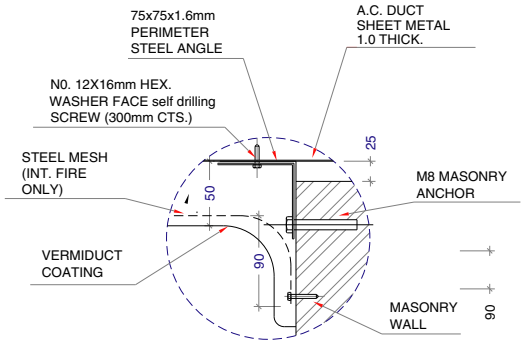

03 - DETAIL A

SCALE 1/5

DUCTWORK UP TO 4800x4800mm.

LAF ★ ★ ★ ★ ★ ★	PRJT. A.C. DUCT 4800x4800mm. - 2HRS. FIRE RATED	JOB N.	AMEND'S
	CLIENT L. & A. Fazzini Manufacturing Pty Ltd		
DWG. TITLE SIDE VIEW & DETAILS	DATE 17/03/98	DRAWN BY A.G.	
	SCALE 1/5/25	DWG. N. 06-A	